Part Design تمرين محيط

Material: Aluminium
Mass: 0.086 kg

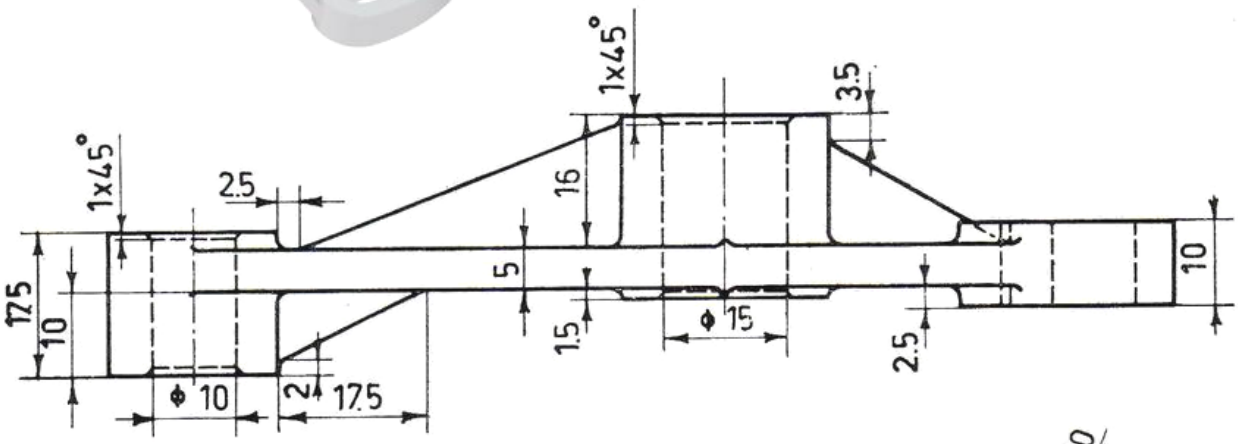

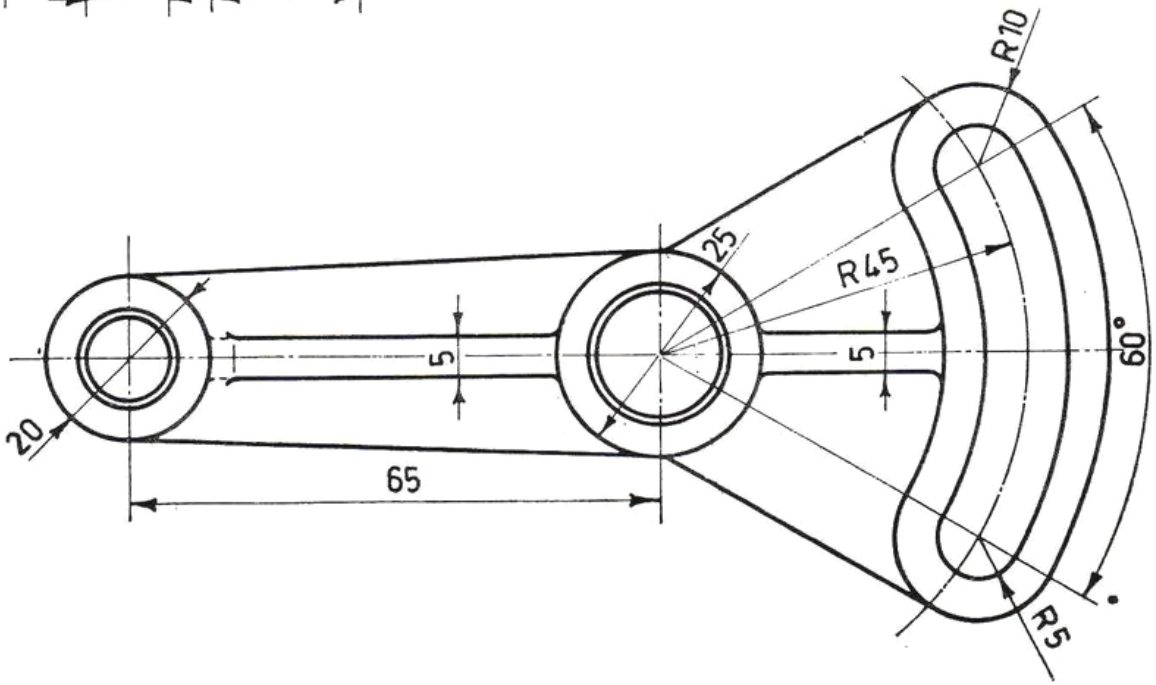

Copyright©2006 2011 www.CATIA.ir All rights reserved