Part Design تمرین محیط

Material: Iron
Mass: 1.056kg

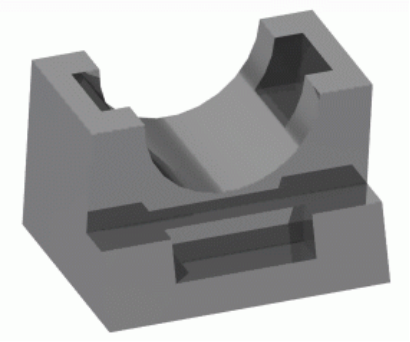

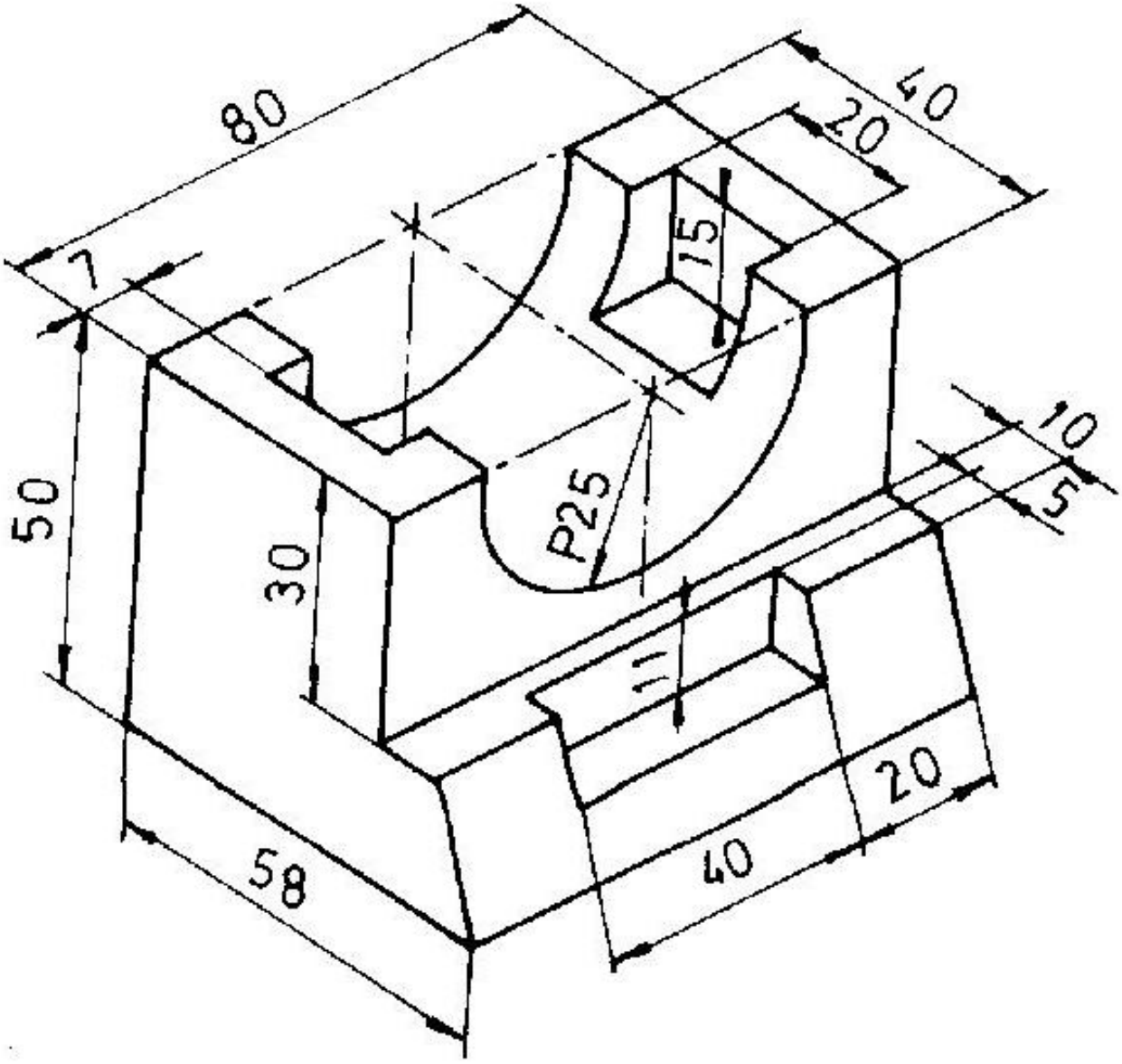

Copyright©2006 2011 www.CATIA.ir All rights reserved